FURUNO

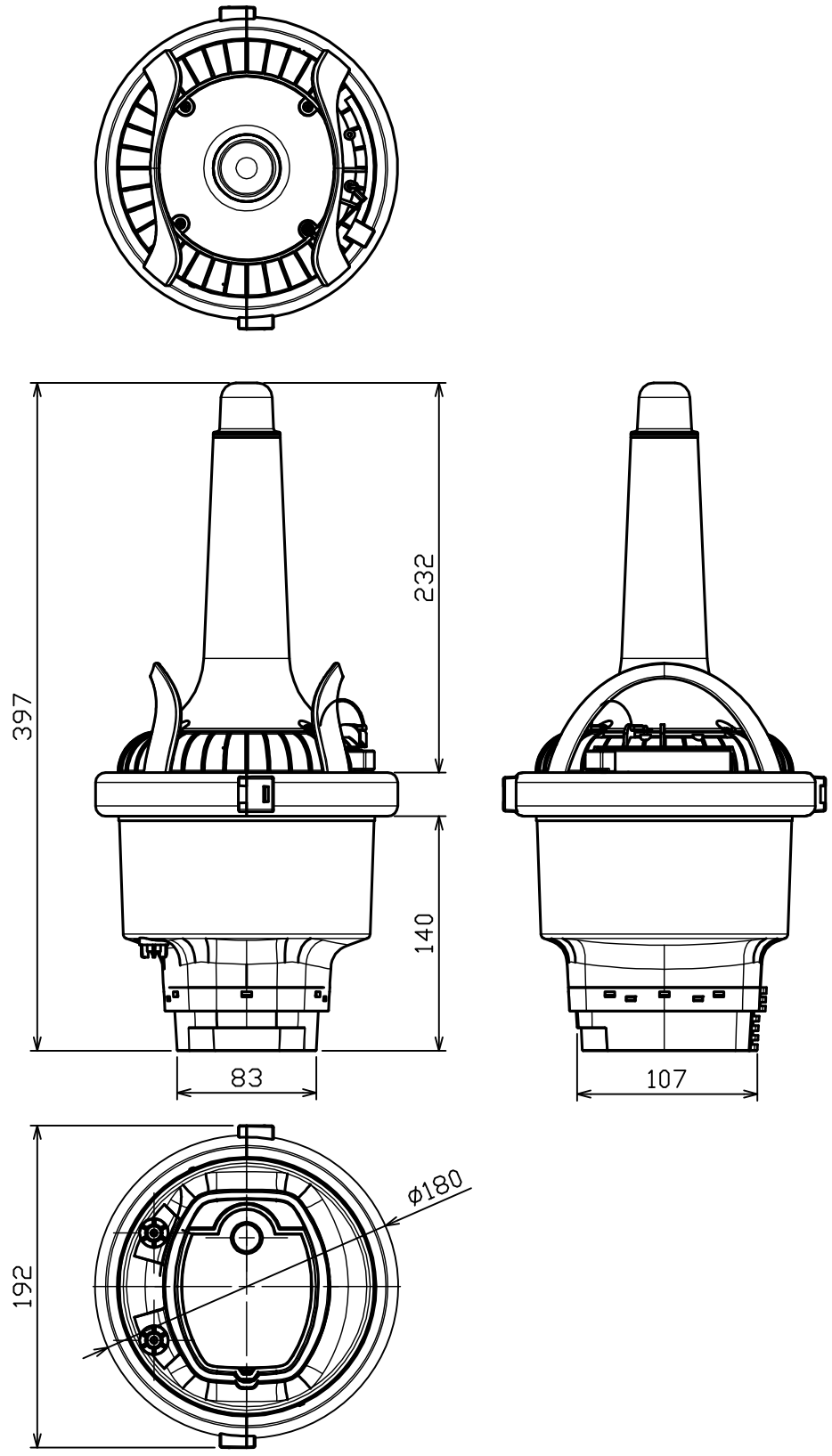

DRAWN 13/Mar/2014 T.YAMASAKI			TITLE VR-7021F
CHECKED 13/Mar/2014 H.MAKI			名称 自己浮揚式データ記録器
APPROVED 13/Mar/2014 H.MAKI		VR-7000	外寸図
SCALE 1/4	MASS 1.9 ±10% kg		NAME FLOAT-FREE DATA RECORDING UNIT
DWG. No. C4485-G07- B		REF. No. M87910	OUTLINE DRAWING

FURUNO ELECTRIC CO., LTD.