FURUNO

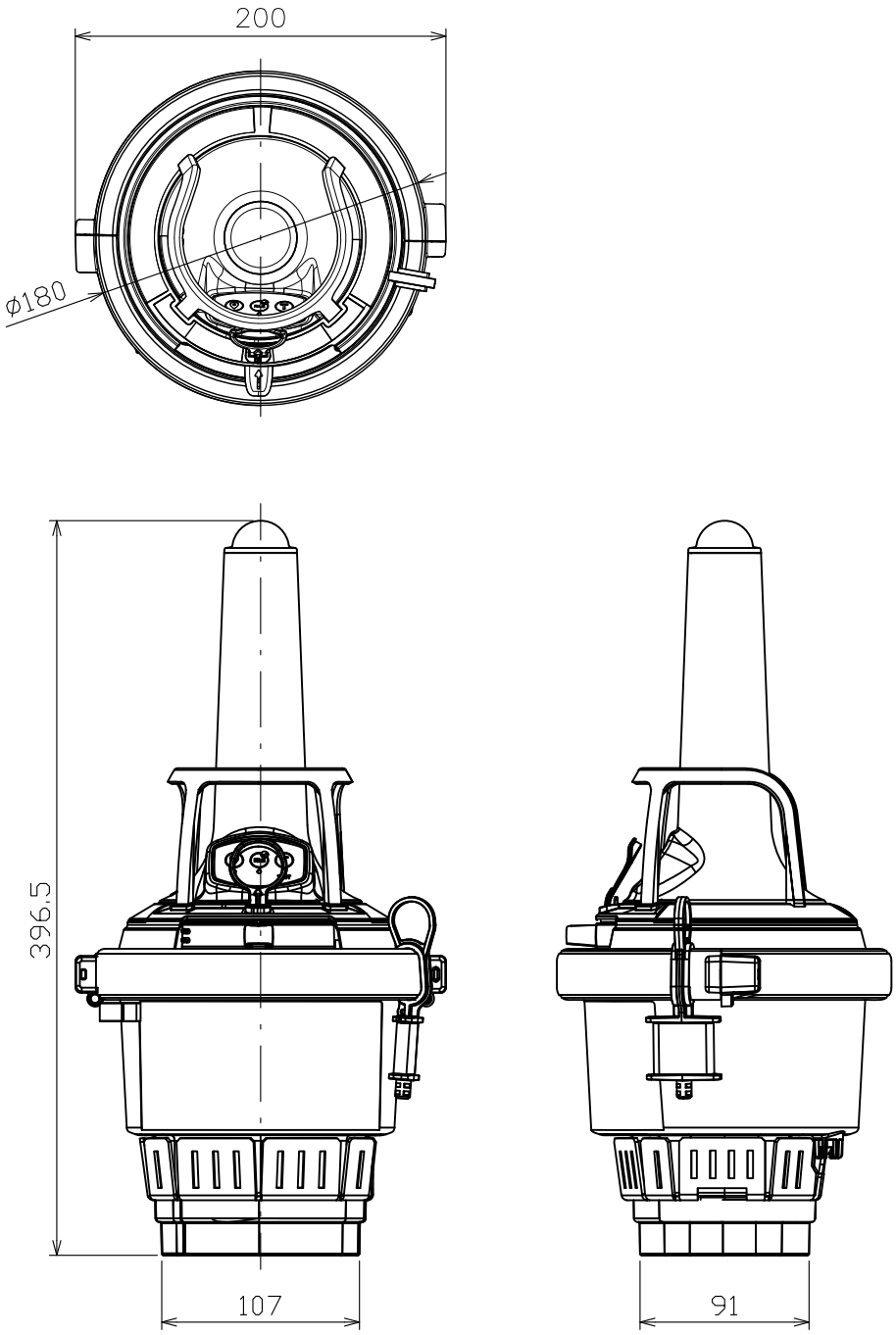

DRAWN 19/Apr/2022 U.PODDAR			TITLE VR-7024F (TRON 40VDR AIS)
CHECKED 19/Apr/2022 T.YAMASAKI			名称 自己浮揚式データ記録器
APPROVED 2/Jun/2022 H.MAKI		VR-7000	外寸図
SCALE 1/4	MASS 2.1 ±10% kg		NAME FLOAT-FREE DATA RECORDING UNIT
DWG. No. C4485-G14- A		REF. No. 103200	OUTLINE DRAWING

FURUNO ELECTRIC CO., LTD.